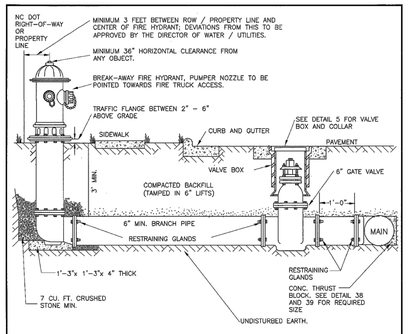

NOTES:
1. FIRE HYDRANT SHALL BE AS MANUFACTURED BY: MUELLER, AMERICAN DARLING, KENNEDY OR CLOW.
2. BRANCH PIPE SHALL BE DUCTILE IRON AWWA C150
3. 6" GATE VALVE SHALL BE AWWA C500 OPEN LEFT
4. STEEL RODS AND BOLTS SHALL BE ¾" HOT DIPPED GALVANIZED
5. FIRE HYDRANTS WILL BE INSTALLED IN TRUE VERTICAL POSITION
FIRE HYDRANTS TO BE LOCATED IN ROW OR 5 FOOT EASEMENT ADJACENT TO ROW

ANYTIME SITE WORK, CONSTRUCTION, ROAD WORK, OR ANY OTHER WORK CHANGES THE GRADE OF THE FIRE HYDRANT, THE PERSON RESPONSIBLE FOR THE WORK IS RESPONSIBLE FOR ADJUSTING THE FIRE HYDRANT TO STAY WITHIN COMPLIANCE.

DETAIL		
1	FIRE HYDRANT ASSEMBLY	CHATHAM COUNTY PUBLIC UTILITIES & WATER DIVISION P.O. BOX 910 PITTSBORO, NC 27312 964 EAST STREET, SUITE 205 PITTSBORO, NC 27312 (919) 852-8270 (BUS) (919) 853-8282 (FAX) CHATHAM COUNTY
REVISION DATE: JULY 1, 2015		

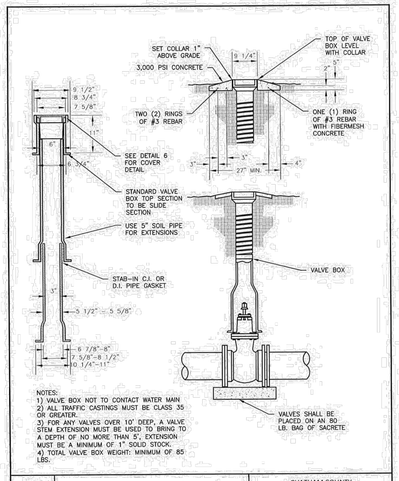

NOTES:
1) VALVE BOX NOT TO CONTACT WATER MAIN
2) ALL TRAFFIC CASTINGS MUST BE CLASS 35 OR GREATER.
3) FOR ANY VALVES OVER 10' DEEP, A VALVE STEM EXTENSION MUST BE USED TO BRING TO A DEPTH OF NO MORE THAN 5'. EXTENSION MUST BE A MINIMUM OF 1" SOLID STOCK.
4) TOTAL VALVE BOX WEIGHT: MINIMUM OF 85 LBS.

DETAIL		
4	VALVE BOX AND COLLAR NOT IN PAVEMENT	CHATHAM COUNTY PUBLIC UTILITIES & WATER DIVISION P.O. BOX 910 PITTSBORO, NC 27312 964 EAST STREET, SUITE 205 PITTSBORO, NC 27312 (919) 852-8270 (BUS) (919) 852-8282 (FAX) CHATHAM COUNTY
REVISION DATE: JULY 1, 2015		

APPROVED METHOD FOR EXTENSION OF VALVE BOX

NOTE: 2'x 2'x 8" CONCRETE PAD REQUIRED ON ALL VALVES. NO PRECAST CONCRETE DOUGHNUT ALLOWED.

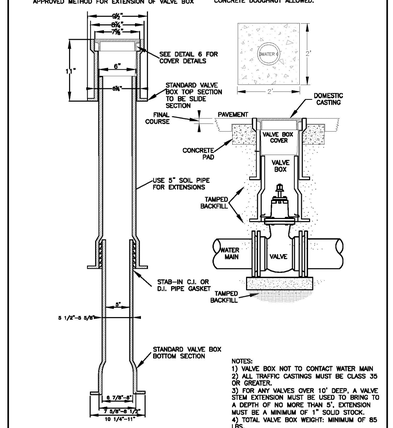

NOTES:
1) VALVE BOX NOT TO CONTACT WATER MAIN
2) ALL TRAFFIC CASTINGS MUST BE CLASS 35 OR GREATER.
3) FOR ANY VALVES OVER 10' DEEP, A VALVE STEM EXTENSION MUST BE USED TO BRING TO A DEPTH OF NO MORE THAN 5'. EXTENSION MUST BE A MINIMUM OF 1" SOLID STOCK.
4) TOTAL VALVE BOX WEIGHT: MINIMUM OF 85 LBS.

DETAIL		
5	VALVE BOX AND COLLAR IN PAVEMENT	CHATHAM COUNTY PUBLIC UTILITIES & WATER DIVISION P.O. BOX 910 PITTSBORO, NC 27312 964 EAST STREET, SUITE 205 PITTSBORO, NC 27312 (919) 852-8270 (BUS) (919) 852-8282 (FAX) CHATHAM COUNTY
REVISION DATE: JULY 1, 2015		

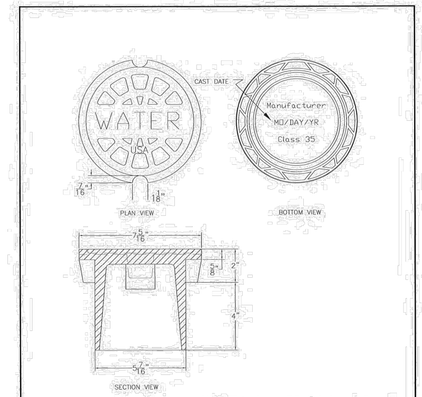

NOTES:
1. "WATER" LETTERING MUST BE 1" RAISED (RECESSED FLUSH).
2. VALVE COVER SHALL BE DOMESTICALLY CAST.
3. COVER MUST HAVE A MINIMUM WEIGHT OF 25 POUNDS.
4. COVER MUST BE CLASS 35 OR GREATER.
5. COVER MUST MEET OR EXCEED AASHTO H-20 LOAD REQUIREMENTS.

DETAIL		
6	VALVE BOX COVER	CHATHAM COUNTY PUBLIC UTILITIES & WATER DIVISION P.O. BOX 910 PITTSBORO, NC 27312 964 EAST STREET, SUITE 205 PITTSBORO, NC 27312 (919) 852-8270 (BUS) (919) 852-8282 (FAX) CHATHAM COUNTY
REVISION DATE: JULY 1, 2015		

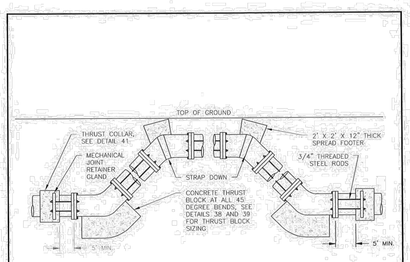

ROD REQUIREMENTS

SIZE OF 45 DEGREE BEND	STATIC THRUST IN POUNDS	NO. OF RODS REQUIRED
6"	4,328	2
8"	7,694	4
12"	17,312	4
16"	30,779	8
24"	69,252	8

NOTES:
1. STEEL RODS AND BOLTS SHALL BE 3/4" HOT DIPPED GALVANIZED.
2. CONCRETE SHALL NOT CONTACT BOLTS OR ENDS OF MECHANICAL JOINT BENDS.
3. RESTRAINED MECHANICAL GLANDS TO BE USED AT ALL FITTINGS.
4. MUST USE DUCTILE IRON EYE BOLTS WHERE NECESSARY.
5. ADD MECHANICAL JOINT RETAINER GLANDS THROUGHOUT ASSEMBLY.
6. 5' MINIMUM COVER MUST BE MAINTAINED ON ALL WATER MAINS.

DETAIL		
43	VERTICAL BEND ASSEMBLY	CHATHAM COUNTY PUBLIC UTILITIES & WATER DIVISION P.O. BOX 910 PITTSBORO, NC 27312 964 EAST STREET, SUITE 205 PITTSBORO, NC 27312 (919) 852-8270 (BUS) (919) 853-8282 (FAX) CHATHAM COUNTY
REVISION DATE: JULY 1, 2015		

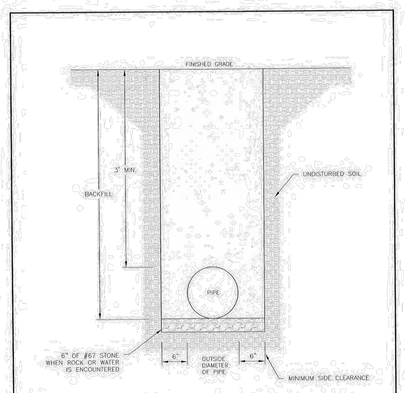

NOTES:
1. TRENCHES REQUIRING SHORING AND BRACING, DIMENSIONS SHALL BE TAKEN FROM THE INSIDE FACE OF THE SHORING AND BRACING.
2. NO ROCKS OR BOULDERS 2" OR LARGER IN DIAMETER TO BE USED IN BACKFILL.
3. ALL BACKFILL MATERIAL SHALL BE SUITABLE NATIVE MATERIAL.
4. BACKFILL SHALL BE TAMPED IN 8" LIFTS.
5. ACHIEVE 95% COMPACTION IN BACKFILL.

DETAIL		
35	DUCTILE IRON PIPE TRENCH BOTTOM DIMENSIONS AND BACKFILLING REQUIREMENTS	CHATHAM COUNTY PUBLIC UTILITIES & WATER DIVISION P.O. BOX 910 PITTSBORO, NC 27312 964 EAST STREET, SUITE 205 PITTSBORO, NC 27312 (919) 852-8270 (BUS) (919) 852-8282 (FAX) CHATHAM COUNTY
REVISION DATE: JULY 1, 2015		

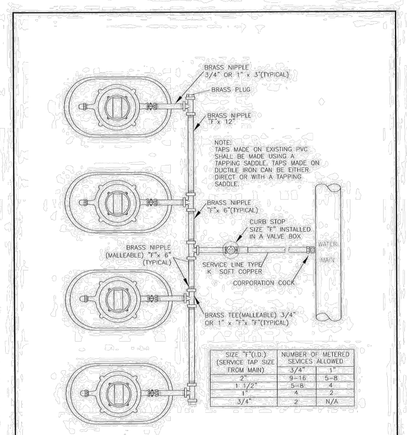

SIZE "1"(I.D.) (SERVICE TAP SIZE FROM MAIN)	NUMBER OF METERED SERVICES ALLOWED	
2"	3/4"	1"
1 1/2"	9–16	5–8
1"	5–8	4
3/4"	4	2
	2	N/A

DETAIL		
25	GANG METER ASSEMBLY	CHATHAM COUNTY PUBLIC UTILITIES & WATER DIVISION P.O. BOX 910 PITTSBORO, NC 27312 964 EAST STREET, SUITE 205 PITTSBORO, NC 27312 (919) 852-8270 (BUS) (919) 852-8282 (FAX) CHATHAM COUNTY
REVISION DATE: JULY 1, 2015		

CALL OR CLICK 811 BEFORE YOU DIG
SAFE DIGGING PARTNER

FINAL DESIGN

NO.	REVISIONS	DATE

CE GROUP
301 GLENWOOD AVE. 220
RALEIGH, NC 27603
PHONE: 919-367-8790
FAX: 919-322-0032
www.cegroupinc.com
License # C-1739

NORTH CAROLINA PROFESSIONAL ENGINEER SEAL 028291 JAMES R. FOSTER, JR. 01/06/22

CONSTRUCTION PLANS FOR CHAPEL OAKS WATER DETAILS

CHATHAM COUNTY, NORTH CAROLINA

Date:	JANUARY 19, 2022
Scale:	N/A
Drawn:	BCS
Checked:	JRF
Project No.	215-018
Computer Dwg. Name	215-018_c551_water details

Sheet No: C551 Of 33

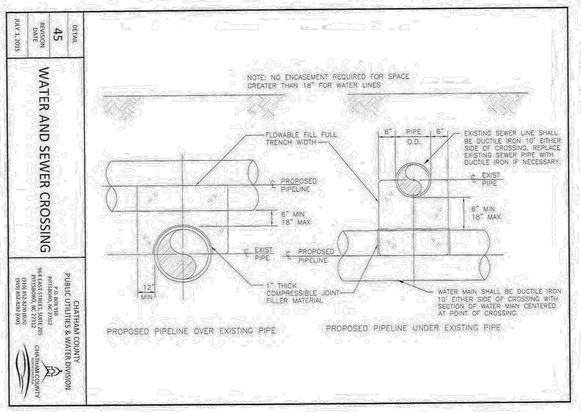

DETAIL 45 — REVISION DATE JULY 1, 2015

WATER AND SEWER CROSSING

CHATHAM COUNTY PUBLIC UTILITIES & WATER DIVISION — P.O. BOX 910 PITTSBORO, NC 27312 — 964 EAST STREET, SUITE 205 PITTSBORO, NC 27312 — (919) 852-8270 (BUS) (919) 852-8282 (FAX)

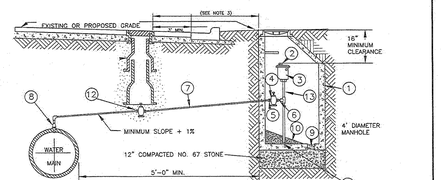

BILL OF MATERIALS

1	PRECAST MANHOLE
2	TRASH HOOD
3	2" AIR RELEASE VALVE
4	2" CURB STOP BALL VALVE
5	ADAPTER
6	2" MECHANICAL JOINT BRASS PIPE AND FITTINGS
7	2" TYPE "K", SOFT COPPER WITH FLARED ELBOW
8	CORPORATION COCK
9	6" DIAMETER DRAIN
10	GROUT 1/8" TO 1'-0" MIN. SLOPE TO DRAIN
11	PIPE CAP
12	2"-GATE VALVE
13	2" TYPE "K", SOFT COPPER PIPE

SEE STANDARD DETAIL 35 TO INSURE PROPER BACKFILL.

NOTE:
1. AIR VALVE TO BE CRISPIN (UL20), ARI (D-050), APCO (200A), OR CLA-VAL (33A).
2. THE AIR RELEASE MANHOLE SHALL BE INSTALLED IN THE SHOULDER OR AS DIRECTED BY THE ENGINEER.
3. FOR MAINS LOCATED OUTSIDE OF STREET RIGHT-OF-WAYS THE MAXIMUM DISTANCE BETWEEN THE MANHOLE AND THE VALVE BOX SHOULD BE THREE (3) FEET.
4. MAIN SHALL BE DEEP ENOUGH TO ACCOMMODATE INSTALLATION AS SHOWN
5. MINIMUM 300 PSI CONCRETE, H-20 LOAD RATED, USE A BUTYL SEALANT BETWEEN FRAME AND MANHOLE TOP SECTION WHEN SECURING FRAME TO MANHOLE TO PROVIDE A WATER TIGHT SEAL. COVER SHALL BE DOMESTICALLY MADE, NON-ROCKING, NON-PICK, SELF POSITIONING FRAME SHALL HAVE A MINIMUM OF 152 POUNDS WITH A CLEAR OPENING DIAMETER OF AT LEAST 22 INCHES.

DETAIL 11 — REVISION DATE FEB. 22, 2016

STANDARD WATER AIR RELEASE VALVE

CHATHAM COUNTY PUBLIC UTILITIES & WATER DIVISION — P.O. BOX 910 PITTSBORO, NC 27312 — 964 EAST STREET, SUITE 205 PITTSBORO, NC 27312 — (919) 852-8270 (BUS) (919) 852-8282 (FAX)

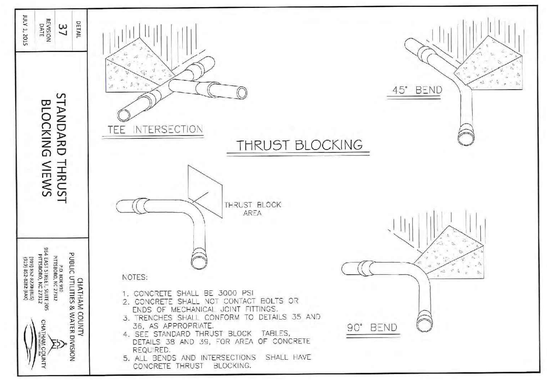

NOTES:
1. CONCRETE SHALL BE 3000 PSI
2. CONCRETE SHALL NOT CONTACT BOLTS OR ENDS OF MECHANICAL JOINT FITTINGS.
3. TRENCHES SHALL CONFORM TO DETAILS 35 AND 36, AS APPROPRIATE.
4. SEE STANDARD THRUST BLOCK TABLES, DETAILS 38 AND 39, FOR AREA OF CONCRETE REQUIRED.
5. ALL BENDS AND INTERSECTIONS SHALL HAVE CONCRETE THRUST BLOCKING.

DETAIL 37 — REVISION DATE JULY 1, 2015

STANDARD THRUST BLOCKING VIEWS

CHATHAM COUNTY PUBLIC UTILITIES & WATER DIVISION — P.O. BOX 910 PITTSBORO, NC 27312 — 964 EAST STREET, SUITE 205 PITTSBORO, NC 27312 — (919) 852-8270 (BUS) (919) 852-8282 (FAX)

SIZE AND DEGREE OF BEND	STATIC THRUST IN POUNDS	MODERATELY SOFT CLAY 800 LBS/FT²	SOFT CLAY 500 LBS/FT²	GRAVEL, COARSE SAND, DRY 1,000 LBS/FT²	DRY CLAY, FINE SAND 800 LBS/FT²	SAND, COMPACT, DRY 800 LBS/FT²	SAND, CLEAN, DRY 600 LBS/FT²	CUSHLAND, VERY LOOSE SOIL 1000 LBS/FT²	ROCK - SOFT 10,000 LBS/FT²
6"									
11 1/4°	1,108	1	1	1	1	1	1	2	1
22 1/2°	2,207	1	2	2	1	1	1	3	1
45°	4,328	2	3	3	1	1	2	5	1
90°	7,996	2	4	5	1	1	2	8	1
PLUG	5,655	2	3	4	1	1	2	6	1
8"									
11 1/4°	1,970	1	1	2	1	1	1	2	1
22 1/2°	3,922	1	2	3	1	1	1	4	1
45°	7,694	2	4	5	1	1	2	8	1
90°	14,215	4	8	9	2	2	4	15	2
PLUG	10,053	3	5	6	2	2	3	10	1
12"									
11 1/4°	4,433	2	3	3	1	1	2	5	1
22 1/2°	8,826	3	5	6	2	2	3	9	1
45°	17,312	5	9	11	3	3	5	18	2
90°	31,983	8	16	19	4	4	8	32	4
PLUG	22,619	6	12	14	3	3	6	23	3
16"									
11 1/4°	7,881	2	4	5	1	1	2	8	1
22 1/2°	15,691	4	8	10	2	2	4	16	2
45°	30,779	8	16	19	4	4	8	31	4
90°	56,861	15	29	35	8	8	15	57	6
PLUG	40,213	10	21	25	5	5	10	41	5

REACTION BEARING AREAS FOR HORIZONTAL WATER PIPE BENDS
BASED ON TEST PRESSURE OF 200 P.S.I.
ALL AREAS GIVEN IN SQUARE FEET

REACTION BEARING AREAS ARE IN SQUARE FEET MEASURED IN A VERTICAL PLANE IN THE TRENCH SIDE AT AN ANGLE OF 90 TO THE THRUST VECTOR.
USE 6" – 90 DEGREE BEND VALUE FOR HYDRANTS FOR ADDITIONAL SAFETY FACTOR.

DETAIL 38 — REVISION DATE JULY 1, 2015

CONCRETE THRUST BLOCKING QUANTITY TABLE, 6" - 16" PIPE

CHATHAM COUNTY PUBLIC UTILITIES & WATER DIVISION — P.O. BOX 910 PITTSBORO, NC 27312 — 964 EAST STREET, SUITE 205 PITTSBORO, NC 27312 — (919) 852-8270 (BUS) (919) 852-8282 (FAX)

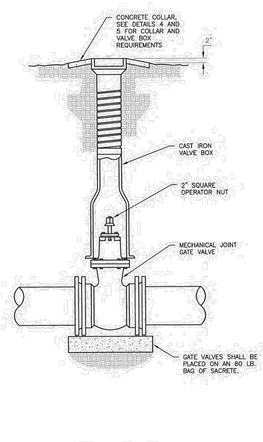

DETAIL 3 — REVISION DATE JULY 1, 2015

GATE VALVE ASSEMBLY

CHATHAM COUNTY PUBLIC UTILITIES & WATER DIVISION — P.O. BOX 910 PITTSBORO, NC 27312 — 964 EAST STREET, SUITE 205 PITTSBORO, NC 27312 — (919) 852-8270 (BUS) (919) 852-8282 (FAX)

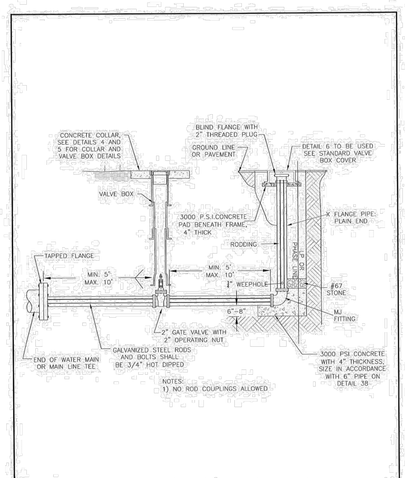

DETAIL 13 — REVISION DATE JULY 1, 2015

2" BLOW-OFF ASSEMBLY AT END OF WATER MAIN

CHATHAM COUNTY PUBLIC UTILITIES & WATER DIVISION — P.O. BOX 910 PITTSBORO, NC 27312 — 964 EAST STREET, SUITE 205 PITTSBORO, NC 27312 — (919) 852-8270 (BUS) (919) 852-8282 (FAX)

NO.	REVISIONS	DATE

CE GROUP
301 GLENWOOD AVE. 220
RALEIGH, NC 27603
PHONE: 919-367-8790
FAX: 919-322-0032
www.cegroupinc.com
License # C-1739

NORTH CAROLINA PROFESSIONAL ENGINEER SEAL 028291 — 01/06/22 — JAMES R. FOSTER, JR.

CONSTRUCTION PLANS FOR CHAPEL OAKS WATER DETAILS

CHATHAM COUNTY, NORTH CAROLINA

CALL OR CLICK 811 BEFORE YOU DIG — SAFE DIGGING PARTNER

FINAL DESIGN

Date:	JANUARY 19, 2022
Scale:	N/A
Drawn:	BCS
Checked:	JRF
Project No.	215-018
Computer Dwg. Name	215-018_c551_water details

Sheet No: C552 Of 33