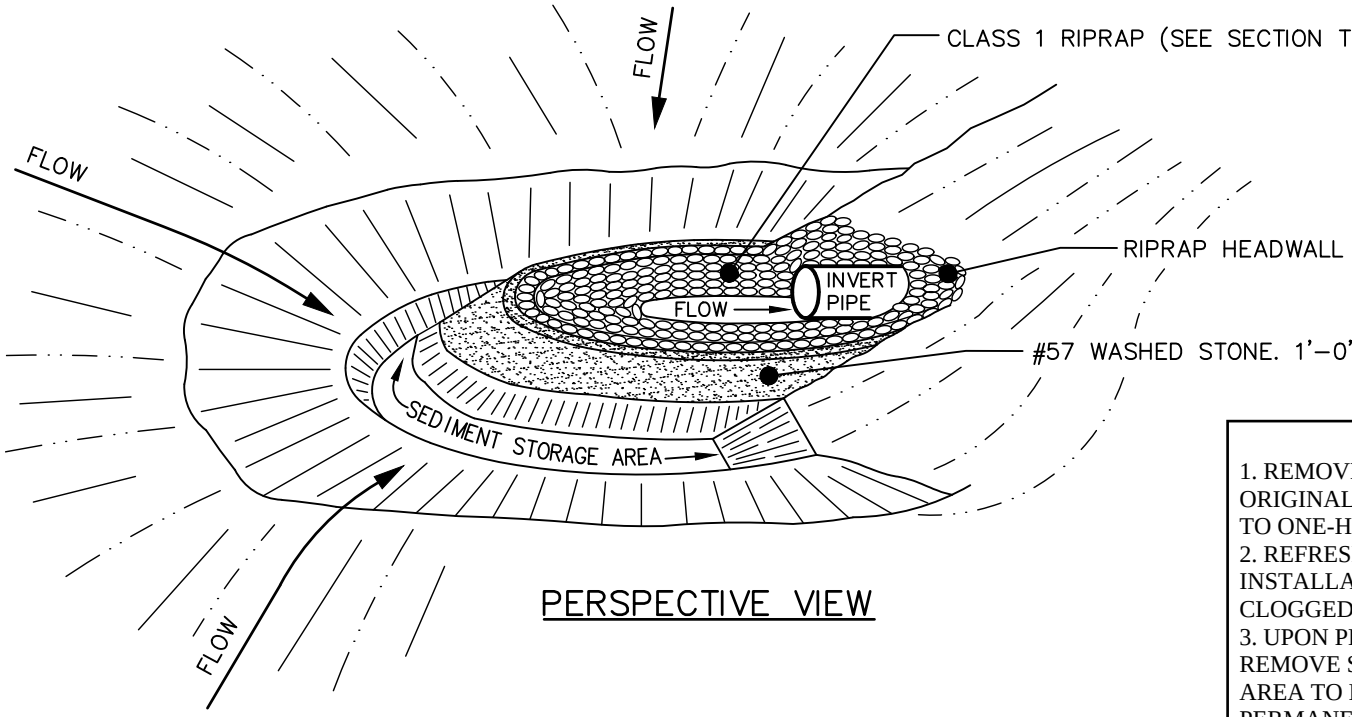

PERSPECTIVE VIEW

DESIGN NOTES:

1. GRAVEL & RIPRAP FILTER BERM BASIN DETAIL IS DESIGNED TO PROTECT EXISTING PIPE INVERTS THAT DRAIN FIVE ACRES OR LESS.
2. DIMENSIONS ARE MINIMUM ACCEPTABLE UNLESS OTHERWISE NOTED.

MAINTENANCE NOTES:

1. REMOVE SEDIMENT AND RESTORE STORAGE AREA TO ORIGINAL DIMENSIONS WHEN SEDIMENT HAS ACCUMLATED TO ONE-HALF THE DESIGN DEPTH OF TRAP.
2. REFRESH STONE AS NEEDED TO RESTORE TO INITIAL INSTALLATION CONDITIONS WHEN STONE BECOMES CLOGGED OR DISLODGED.
3. UPON PERMANENT STABILIZATION OF DRAINAGE AREAS, REMOVE STORED SEDIMENT & TEMPORARY STONE. SMOOTH AREA TO BLEND WITH ADJOINING AREAS AND PROVIDE PERMANENT GROUNDCOVER.

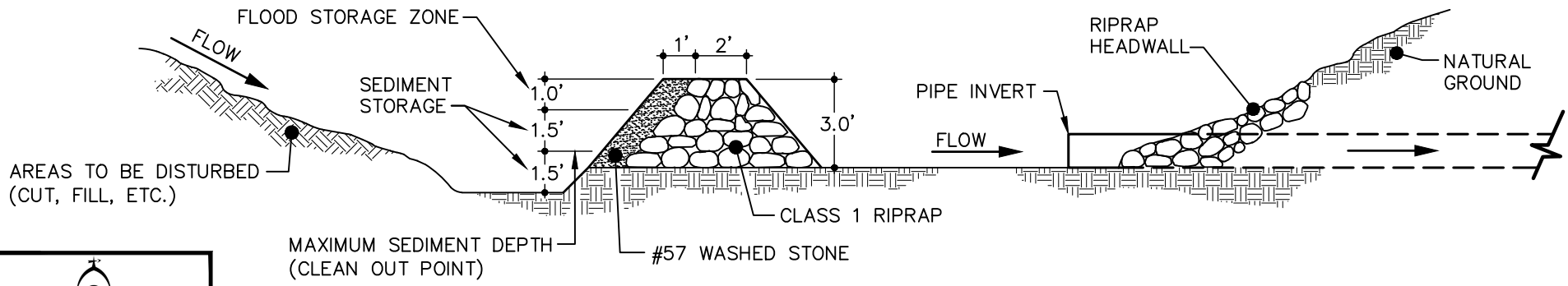

SECTION THRU BASIN, FILTER AND CULVERT PIPE

CHATHAM COUNTY
NORTH CAROLINA

WATERSHED PROTECTION DEPARTMENT

STANDARD ROCK FILTER BERM (PIPE INLETS)

DETAIL NUMBER

2018-005

SHEET 1 of 1