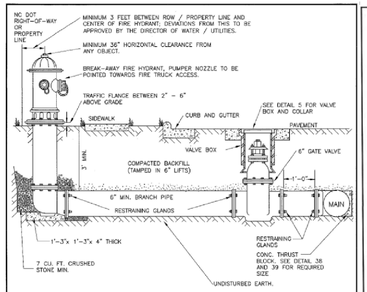

NOTES:
1. FIRE HYDRANT SHALL BE AS MANUFACTURED BY: MUELLER, AMERICAN DARLING, KENNEDY OR CLOW.
2. BRANCH PIPE SHALL BE DUCTILE IRON AWWA C150
3. 6" GATE VALVE SHALL BE AWWA C500 OPEN LEFT
4. STEEL RODS AND BOLTS SHALL BE ¾" HOT DIPPED GALVANIZED
5. FIRE HYDRANTS WILL BE INSTALLED IN TRUE VERTICAL POSITION
FIRE HYDRANTS TO BE LOCATED IN ROW OR 5 FOOT EASEMENT ADJACENT TO ROW

ANYTIME SITE WORK, CONSTRUCTION, ROAD WORK, OR ANY OTHER WORK CHANGES THE GRADE OF THE FIRE HYDRANT, THE PERSON RESPONSIBLE FOR THE WORK IS RESPONSIBLE FOR ADJUSTING THE FIRE HYDRANT TO STAY WITHIN COMPLIANCE.

DETAIL		
1	FIRE HYDRANT ASSEMBLY	CHATHAM COUNTY PUBLIC UTILITIES & WATER DIVISION P.O. BOX 910 PITTSBORO, NC 27312 964 EAST STREET, SUITE 205 PITTSBORO, NC 27312 (919) 852-8270 (WUD) (919) 852-8282 (FAX)
REVISION DATE		
JULY 1, 2015		

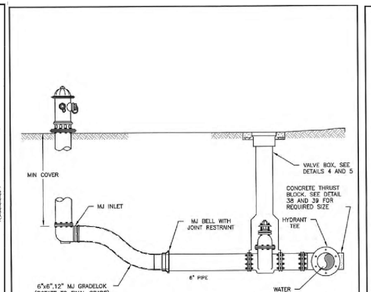

NOTES:
1. REFER TO DETAIL 1 FOR FURTHER NOTES, PLACEMENT BACKFILL, AND OTHER RELEVANT INFORMATION.

DETAIL		
2	TYP. FIRE HYDRANT & GATE VALVE WITH GRADELOK	CHATHAM COUNTY PUBLIC UTILITIES & WATER DIVISION P.O. BOX 910 PITTSBORO, NC 27312 964 EAST STREET, SUITE 205 PITTSBORO, NC 27312 (919) 852-8270 (WUD) (919) 852-8282 (FAX)
REVISION DATE		
JULY 1, 2015		

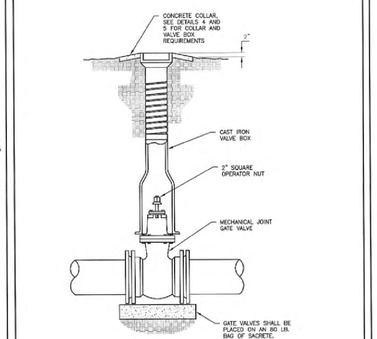

DETAIL		
3	GATE VALVE ASSEMBLY	CHATHAM COUNTY PUBLIC UTILITIES & WATER DIVISION P.O. BOX 910 PITTSBORO, NC 27312 964 EAST STREET, SUITE 205 PITTSBORO, NC 27312 (919) 852-8270 (WUD) (919) 852-8282 (FAX)
REVISION DATE		
JULY 1, 2015		

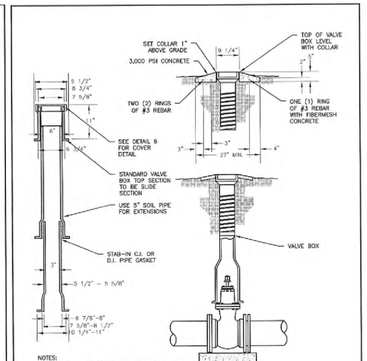

NOTES:
1) VALVE BOX NOT TO CONTACT WATER MAIN
2) ALL TRAFFIC CASTINGS MUST BE CLASS 35 OR GREATER.
3) FOR ANY VALVES OVER 10' DEEP, A VALVE STEM EXTENSION MUST BE USED TO BRING TO A DEPTH OF NO MORE THAN 5', EXTENSION MUST BE A MINIMUM OF 1" SOLID STOCK.
4) TOTAL VALVE BOX WEIGHT: MINIMUM OF 85 LBS.

DETAIL		
4	VALVE BOX AND COLLAR NOT IN PAVEMENT	CHATHAM COUNTY PUBLIC UTILITIES & WATER DIVISION P.O. BOX 910 PITTSBORO, NC 27312 964 EAST STREET, SUITE 205 PITTSBORO, NC 27312 (919) 852-8270 (WUD) (919) 852-8282 (FAX)
REVISION DATE		
JULY 1, 2015		

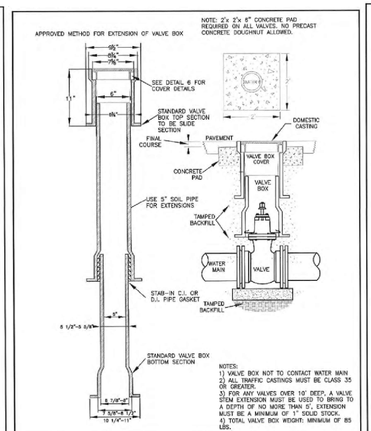

NOTES:
1) VALVE BOX NOT TO CONTACT WATER MAIN
2) ALL TRAFFIC CASTINGS MUST BE CLASS 35 OR GREATER.
3) FOR ANY VALVES OVER 10' DEEP, A VALVE STEM EXTENSION MUST BE USED TO BRING TO A DEPTH OF NO MORE THAN 5', EXTENSION MUST BE A MINIMUM OF 1" SOLID STOCK.
4) TOTAL VALVE BOX WEIGHT: MINIMUM OF 85 LBS.

DETAIL		
5	VALVE BOX AND COLLAR IN PAVEMENT	CHATHAM COUNTY PUBLIC UTILITIES & WATER DIVISION P.O. BOX 910 PITTSBORO, NC 27312 964 EAST STREET, SUITE 205 PITTSBORO, NC 27312 (919) 852-8270 (WUD) (919) 852-8282 (FAX)
REVISION DATE		
JULY 1, 2015		

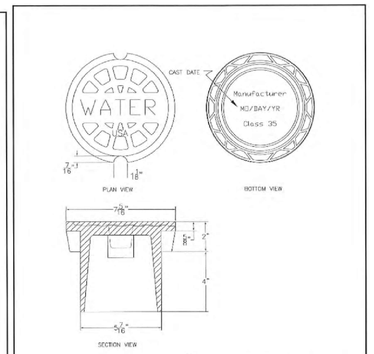

NOTES:
1. "WATER" LETTERING MUST BE 1" RAISED (RECESSED FLUSH).
2. VALVE COVER SHALL BE DOMESTICALLY CAST.
3. COVER MUST HAVE A MINIMUM WEIGHT OF 25 POUNDS.
4. COVER MUST BE CLASS 35 OR GREATER.
5. COVER MUST MEET OR EXCEED AASHTO H-20 LOAD REQUIREMENTS.

DETAIL		
6	VALVE BOX COVER	CHATHAM COUNTY PUBLIC UTILITIES & WATER DIVISION P.O. BOX 910 PITTSBORO, NC 27312 964 EAST STREET, SUITE 205 PITTSBORO, NC 27312 (919) 852-8270 (WUD) (919) 852-8282 (FAX)
REVISION DATE		
JULY 1, 2015		

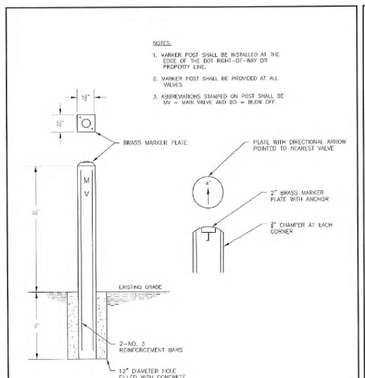

NOTES:
1. MARKER POST SHALL BE INSTALLED AT THE EDGE OF THE DOT RIGHT-OF-WAY OR PROPERTY LINE.
2. MARKER POST SHALL BE PROVIDED AT ALL VALVES
3. ABBREVIATIONS STAMPED ON POST SHALL BE MV = MAIN VALVE AND BO = BLOW OFF.

DETAIL		
7	VALVE MARKER POST	CHATHAM COUNTY PUBLIC UTILITIES & WATER DIVISION P.O. BOX 910 PITTSBORO, NC 27312 964 EAST STREET, SUITE 205 PITTSBORO, NC 27312 (919) 852-8270 (WUD) (919) 852-8282 (FAX)
REVISION DATE		
JULY 1, 2015		

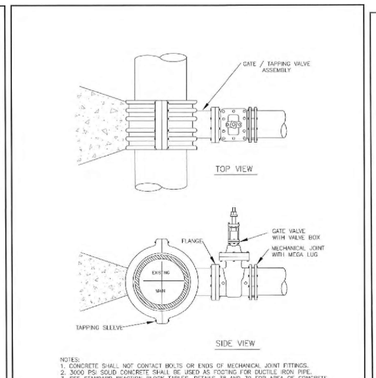

NOTES:
1. CONCRETE SHALL NOT CONTACT BOLTS OR ENDS OF MECHANICAL JOINT FITTINGS.
2. 3000 PSI SOLID CONCRETE SHALL BE USED AS FOOTING FOR DUCTILE IRON PIPE.
3. SEE STANDARD REACTION BLOCK TABLES, DETAILS 38 AND 39 FOR AREA OF CONCRETE REQUIRED.

DETAIL		
8	4" - 24" TAPPING SLEEVE ASSEMBLY	CHATHAM COUNTY PUBLIC UTILITIES & WATER DIVISION P.O. BOX 910 PITTSBORO, NC 27312 964 EAST STREET, SUITE 205 PITTSBORO, NC 27312 (919) 852-8270 (WUD) (919) 852-8282 (FAX)
REVISION DATE		
JULY 1, 2015		

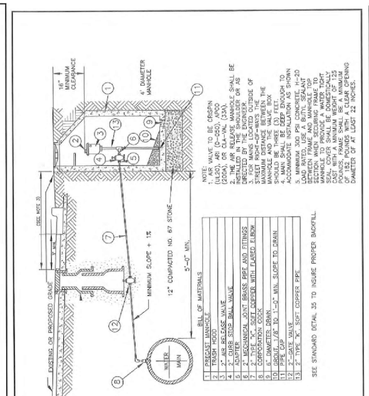

DETAIL		
11	STANDARD WATER AIR RELEASE VALVE	CHATHAM COUNTY PUBLIC UTILITIES & WATER DIVISION P.O. BOX 910 PITTSBORO, NC 27312 964 EAST STREET, SUITE 205 PITTSBORO, NC 27312 (919) 852-8270 (WUD) (919) 852-8282 (FAX)
REVISION DATE		
FEB. 23, 2016		

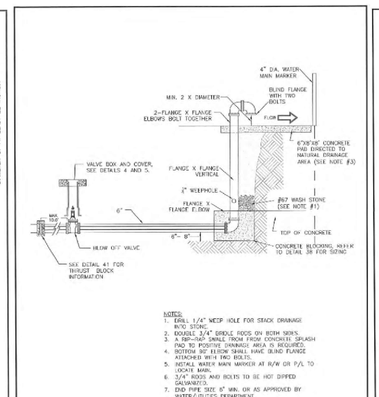

NOTES:
1. DRILL 1/4" WEEP HOLE FOR SPACE DRAINAGE INTO STONE.
2. DOUBLE 3/4" BRIDLE RODS ON BOTH SIDES.
3. A RIP-RAP SPALLE FROM CONCRETE SPLASH PAD TO POSITIVE DRAINAGE AREA IS REQUIRED.
4. BOTTOM OF FLANGE SHALL HAVE BLIND FLANGE WITH TWO BOLTS FOR FUTURE.
5. INSTALL WATER MAIN MARKER AT R/W OR P/L TO LOCATE MAIN.
6. 3/4" RODS AND BOLTS TO BE HOT DIPPED GALVANIZED.
7. END PIPE SIZE 6" MIN. OR AS APPROVED BY WATER/UTILITIES DEPARTMENT.

DETAIL		
12	PERMANENT WATER MAIN BLOW-OFF ASSEMBLY	CHATHAM COUNTY PUBLIC UTILITIES & WATER DIVISION P.O. BOX 910 PITTSBORO, NC 27312 964 EAST STREET, SUITE 205 PITTSBORO, NC 27312 (919) 852-8270 (WUD) (919) 852-8282 (FAX)
REVISION DATE		
JULY 1, 2015		

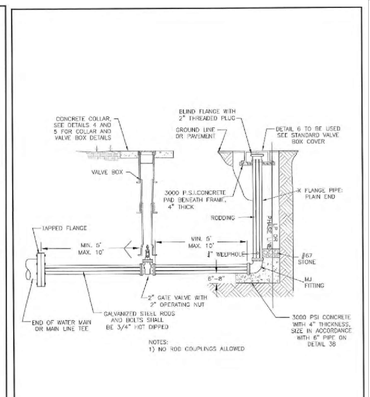

NOTES:
1) NO ROD COUPLINGS ALLOWED

DETAIL		
13	2" BLOW-OFF ASSEMBLY AT END OF WATER MAIN	CHATHAM COUNTY PUBLIC UTILITIES & WATER DIVISION P.O. BOX 910 PITTSBORO, NC 27312 964 EAST STREET, SUITE 205 PITTSBORO, NC 27312 (919) 852-8270 (WUD) (919) 852-8282 (FAX)
REVISION DATE		
JULY 1, 2015		

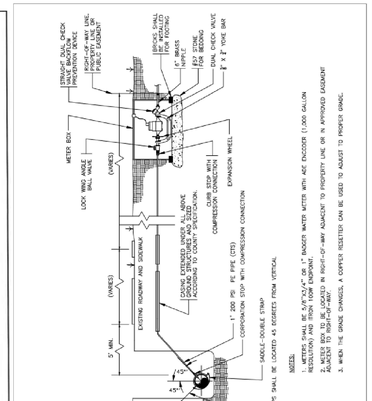

NOTES:
1. METERS SHALL BE 5/8"X3/4" OR 1" BADGER METER WITH ADE ENCODER (1,000 GALLON PER REVOLUTION).
2. METER BOX TO BE LOCATED IN RIGHT-OF-WAY ADJACENT TO PROPERTY LINE OR IN APPROVED EASEMENT ADJACENT TO RIGHT-OF-WAY.
3. WHEN THE GRADE CHANGES, A COPPER REGETTER CAN BE USED TO ADJUST TO PROPER GRADE.

DETAIL		
16	5/8" X 3/4" - 1" METER SERVICE CONNECTION	CHATHAM COUNTY PUBLIC UTILITIES & WATER DIVISION P.O. BOX 910 PITTSBORO, NC 27312 964 EAST STREET, SUITE 205 PITTSBORO, NC 27312 (919) 852-8270 (WUD) (919) 852-8282 (FAX)
REVISION DATE: NOVEMBER 16, 2015		

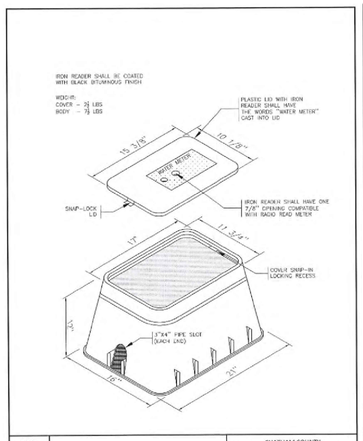

DETAIL		
17	WATER METER BOX	CHATHAM COUNTY PUBLIC UTILITIES & WATER DIVISION P.O. BOX 910 PITTSBORO, NC 27312 964 EAST STREET, SUITE 205 PITTSBORO, NC 27312 (919) 852-8270 (WUD) (919) 852-8282 (FAX)
REVISION DATE		
JULY 1, 2015		

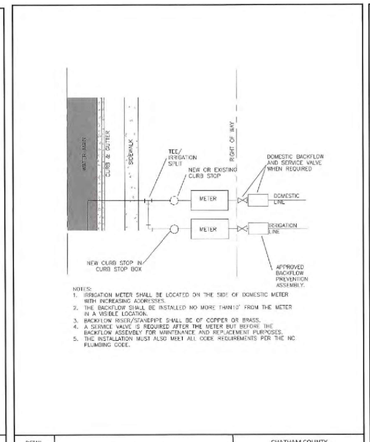

NOTES:
1. IRRIGATION METER SHALL BE LOCATED ON THE SIDE OF DOMESTIC METER WITH INCREASING ADDRESSES.
2. THE BACKFLOW SHALL BE INSTALLED NO MORE THAN12" FROM THE METER IN A VISIBLE LOCATION.
3. BACKFLOW HOUSE/ENCLOSURE SHALL BE OF COPPER OR BRASS.
4. A 2" BYPASS LINE IS REQUIRED AFTER THE METER BUT BEFORE THE BACKFLOW ASSEMBLY FOR MAINTENANCE AND REPLACEMENT PURPOSES.
5. THE INSTALLATION MUST ALSO MEET ALL CODE REQUIREMENTS PER THE NC PLUMBING CODE.

DETAIL		
23	IRRIGATION TAP ON NEW AND EXISTING SERVICES	CHATHAM COUNTY PUBLIC UTILITIES & WATER DIVISION P.O. BOX 910 PITTSBORO, NC 27312 964 EAST STREET, SUITE 205 PITTSBORO, NC 27312 (919) 852-8270 (WUD) (919) 852-8282 (FAX)
REVISION DATE		
JULY 3, 2015		

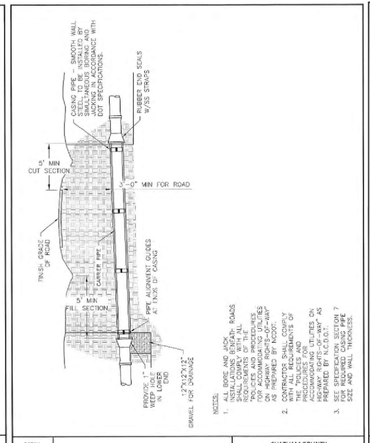

NOTES:
1. ALL BORING AND JACKING OPERATIONS ON ROADS SHALL COMPLY WITH ALL DOT POLICIES, PROCEDURES AND PROCEDURES.
2. ALL BORING AND JACKING ON "HIGHWAY" RIGHTS-OF-WAY SHALL COMPLY WITH DOT PROCEDURES. CONTRACTOR SHALL COMPLY WITH ALL REQUIREMENTS OF THE DOT PROCEDURES.
3. SEE SPECIFICATION SECTION 7 FOR CASING PIPE SIZE AND WALL THICKNESS.

DETAIL		
32	BORING AND SPIDER ASSEMBLY	CHATHAM COUNTY PUBLIC UTILITIES & WATER DIVISION P.O. BOX 910 PITTSBORO, NC 27312 964 EAST STREET, SUITE 205 PITTSBORO, NC 27312 (919) 852-8270 (WUD) (919) 852-8282 (FAX)
REVISION DATE		
JULY 1, 2015		

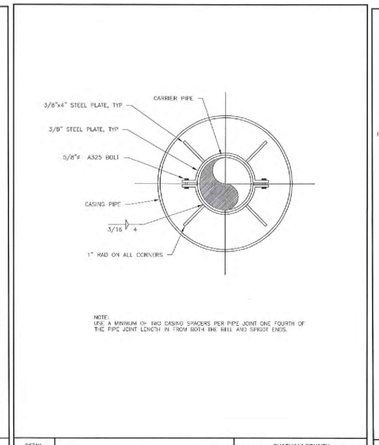

NOTE:
USE A MINIMUM OF TWO CASING SPACERS PER PIPE JOINT ONE FOURTH OF THE PIPE JOINT LENGTH IN FROM BOTH THE BELL AND SPIGOT ENDS.

DETAIL		
33	BORING PIPE ALIGNMENT GUIDE	CHATHAM COUNTY PUBLIC UTILITIES & WATER DIVISION P.O. BOX 910 PITTSBORO, NC 27312 964 EAST STREET, SUITE 205 PITTSBORO, NC 27312 (919) 852-8270 (WUD) (919) 852-8282 (FAX)
REVISION DATE		
JULY 1, 2015		

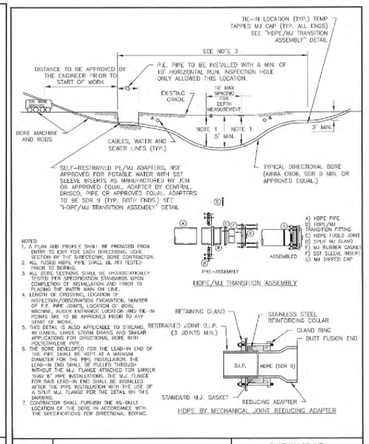

NOTES:
1. A PLAN AND PROFILE SHALL BE PROVIDED FROM A BORE TO EXIT FOR EACH DIRECTIONAL BORE SECTION BY THE DIRECTIONAL BORE CONTRACTOR.
2. ALL FUSED HDPE PIPE SHALL BE PRE TESTED PRIOR TO BORING.
3. THE DIRECTIONAL BORING SHALL BE INSTALLED STRICTLY TO THE SPECIFICATION STANDARDS UPON COMPLETION OF INSTALLATION AND PRIOR TO PLACING THE WATER MAIN ON LINE.
4. LENGTH OF CROSSING, LOCATION OF CROSSING, DIRECTIONAL BORE MATERIAL, DIAMETER OF P.E. PIPE, JOINTS, LOCATION OF BORE MACHINE, BORE ENTRANCE LOCATION AND TIE-IN POINTS TO BE APPROVED PRIOR TO ANY CONSTRUCTION.
5. THIS DETAIL IS ALSO APPLICABLE TO STREAMS, RESTRAINED JOINT D.I.P. MECHANICAL SERVICE STYLE BRACKETS AND SIMILAR APPLICATIONS FOR DIRECTIONAL BORE WITH PRIOR APPROVAL.
6. THE BORE DEVELOPED FOR THE LEAD-IN END OF THE PIPE SHALL BE KEPT AT A MINIMUM DIAMETER FOR THE PIPE INSTALLATION. THE LEAD-IN END SHALL BE PLUGGED TOGETHER WITH THE PIPE. IF THE BORE IS LARGER THAN 6" PIPE INSTALLATIONS, THE MJ FLANGE FOR SAID LEAD-IN END SHALL BE INSTALLED AFTER THE PIPE INSTALLATION WITH THE USE OF A SPLIT MJ FLANGE FOR THE DETAIL ON THIS DRAWING.
7. CONTRACTOR SHALL FURNISH THE AS-BUILT LOCATION OF THE BORE IN ACCORDANCE WITH THE SPECIFICATIONS FOR DIRECTIONAL BORING.

DETAIL		
34	DIRECTIONAL BORE	CHATHAM COUNTY PUBLIC UTILITIES & WATER DIVISION P.O. BOX 910 PITTSBORO, NC 27312 964 EAST STREET, SUITE 205 PITTSBORO, NC 27312 (919) 852-8270 (WUD) (919) 852-8282 (FAX)
REVISION DATE		
JULY 1, 2015		

NOTES

1. ALL CONSTRUCTION TO BE IN STRICT ACCORDANCE WITH ALL CHATHAM COUNTY AND NCDOT STANDARDS AND SPECIFICATIONS.

B&F CONSULTING
2805 Tobermory Lane
Raleigh, NC 27606
Phone No. (919) 618-0180
License No. C-2149

NORTH CAROLINA PROFESSIONAL SEAL 027445 ENGINEER AMBER FARRELL

REVISIONS

NO.	DATE	DESCRIPTION

PROJECT INFORMATION

PROJECT MANAGER:	RJB
DRAWN BY:	AJF
APPROVED BY:	RJB
DRAWING NAME:	BASE-SUNSETGROV

PROJECT NAME

SUNSET GROVE SUBDIVISION PHASE 2

CHATHAM COUNTY NORTH CAROLINA

DEVELOPER

CHATHAM CAPITAL LLC

400 MARKET STREET
CHAPEL HILL, NC 27516

SHEET NAME

DETAILS

DRAWING SCALE

AS SHOWN

PLAN SET

CONSTRUCTION DRAWINGS

DATE

3-8-2019

SHEET NUMBER

D-3

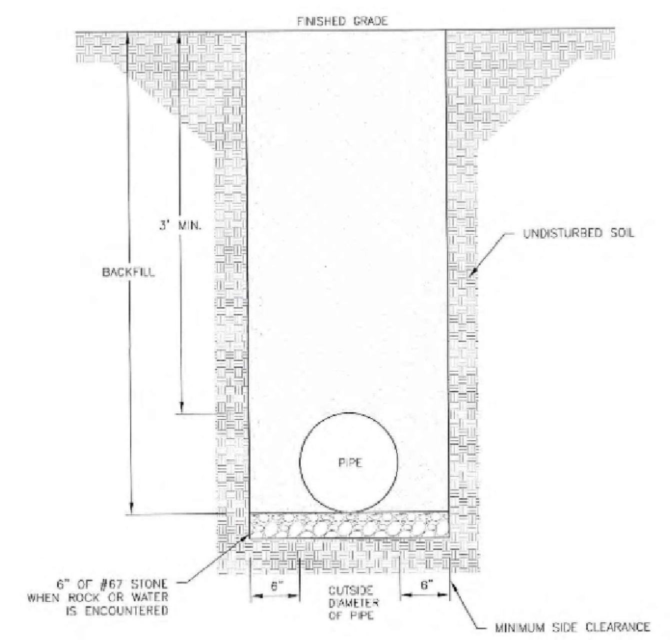

NOTES:
1. TRENCHES REQUIRING SHORING AND BRACING, DIMENSIONS SHALL BE TAKEN FROM THE INSIDE FACE OF THE SHORING AND BRACING.
2. NO ROCKS OR BOULDERS 2" OR LARGER IN DIAMETER TO BE USED IN BACKFILL.
3. ALL BACKFILL MATERIAL SHALL BE SUITABLE NATIVE MATERIAL.
4. BACKFILL SHALL BE TAMPED IN 6" LIFTS.
5. ACHIEVE 95% COMPACTION IN BACKFILL.

DETAIL 35 | REVISION DATE JULY 1, 2015

DUCTILE IRON PIPE TRENCH BOTTOM DIMENSIONS AND BACKFILLING REQUIREMENTS

CHATHAM COUNTY PUBLIC UTILITIES & WATER DIVISION
P.O. BOX 910 PITTSBORO, NC 27312
964 EAST STREET, SUITE 205 PITTSBORO, NC 27312
(919) 852-8270 (BUS) (919) 852-8282 (FAX)
CHATHAM COUNTY

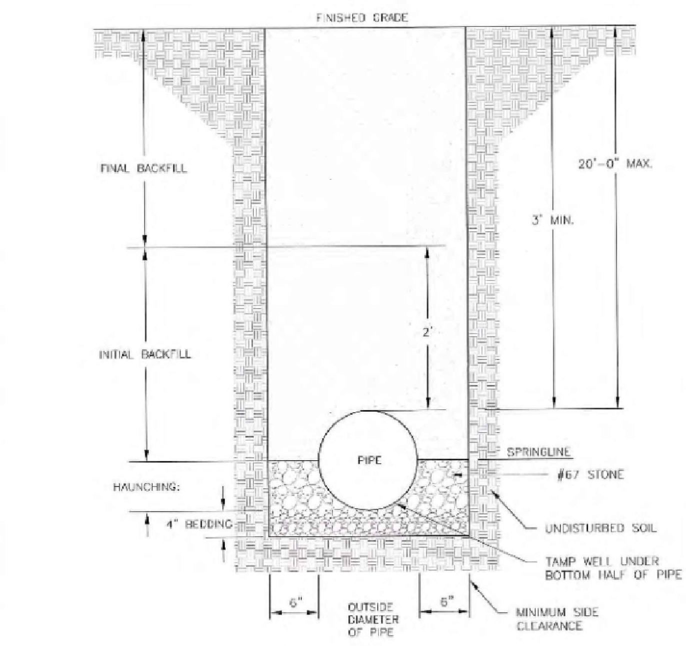

NOTES:
1. TRENCHES REQUIRING SHORING AND BRACING, DIMENSIONS SHALL BE TAKEN FROM THE INSIDE FACE OF THE SHORING AND BRACING.
2. NO ROCKS OR BOULDERS 2" OR LARGER IN DIAMETER TO BE USED IN BACKFILL.
3. ALL BACKFILL MATERIAL SHALL BE SUITABLE NATIVE MATERIAL.
4. BACKFILL SHALL BE TAMPED IN 6" LIFTS.
5. ACHIEVE 95% COMPACTION IN BACKFILL.

DETAIL 36 | REVISION DATE JULY 1, 2015

PVC PIPE TRENCH BOTTOM DIMENSIONS AND BACKFILLING REQUIREMENTS

CHATHAM COUNTY PUBLIC UTILITIES & WATER DIVISION
P.O. BOX 910 PITTSBORO, NC 27312
964 EAST STREET, SUITE 205 PITTSBORO, NC 27312
(919) 852-8270 (BUS) (919) 852-8282 (FAX)
CHATHAM COUNTY

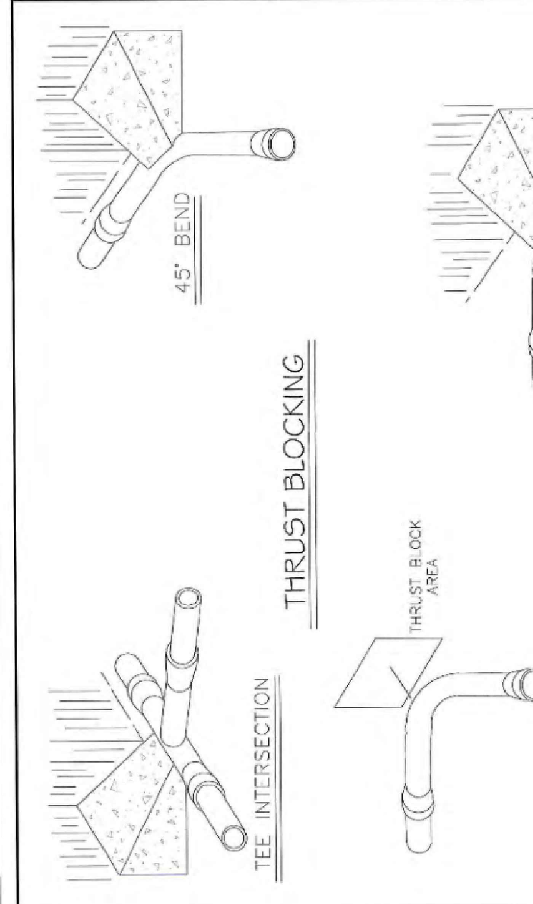

NOTES:
1. CONCRETE SHALL BE 3000 PSI
2. CONCRETE SHALL NOT CONTACT BOLTS OR ENDS OF MECHANICAL JOINT FITTINGS.
3. TRENCHES SHALL CONFORM TO DETAILS 35 AND 36, AS APPROPRIATE.
4. SEE STANDARD THRUST BLOCK TABLES, DETAILS 38 AND 39, FOR AREA OF CONCRETE REQUIRED.
5. ALL BENDS AND INTERSECTIONS SHALL HAVE CONCRETE THRUST BLOCKING.

DETAIL 37 | REVISION DATE JULY 1, 2015

STANDARD THRUST BLOCKING VIEWS

CHATHAM COUNTY PUBLIC UTILITIES & WATER DIVISION
P.O. BOX 910 PITTSBORO, NC 27312
964 EAST STREET, SUITE 205 PITTSBORO, NC 27312
(919) 852-8270 (BUS) (919) 852-8282 (FAX)
CHATHAM COUNTY

REACTION BEARING AREAS FOR HORIZONTAL WATER PIPE BENDS
BASED ON TEST PRESSURE OF 200 P.S.I.
ALL AREAS GIVEN IN SQUARE FEET.

SIZE AND DEGREE OF BEND	STATIC THRUST IN POUNDS	MODERATELY DRY CLAY 4000 LBS/FT²	SOFT CLAY 2000 LBS/FT²	GRAVEL / COARSE SAND 1600 LBS/FT²	DRY CLAY - ALWAYS DRY 8000 LBS/FT²	SAND, COMPACT FIRM 8000 LBS/FT²	SAND - CLEAN DRY 4000 LBS/FT²	QUICKSAND - VERY POOR SOIL 1000 LBS/FT²	ROCK - POOR 10,000 LBS/FT²
6"									
11 1/4'	1,108	1	1	1	1	1	1	2	1
22 1/2'	2,207	1	2	2	1	1	1	3	1
45'	4,328	2	3	3	1	1	2	5	1
90'	7,996	2	4	5	1	1	2	8	1
PLUG	5,655	2	3	4	1	1	2	6	1
8"									
11 1/4'	1,970	1	1	2	1	1	1	2	1
22 1/2'	3,922	1	2	3	1	1	1	4	1
45'	7,694	2	4	5	1	1	2	8	1
90'	14,215	4	8	9	2	2	4	15	2
PLUG	10,053	3	5	6	2	2	3	10	1
12"									
11 1/4'	4,433	2	3	3	1	1	2	5	1
22 1/2'	8,826	3	5	6	2	2	3	9	1
45'	17,312	5	9	11	3	3	5	18	2
90'	31,983	8	16	19	4	4	8	32	4
PLUG	22,619	6	12	14	3	3	6	23	3
16"									
11 1/4'	7,881	2	4	5	1	1	2	8	1
22 1/2'	15,691	4	8	10	2	2	4	16	2
45'	30,779	8	15	19	4	4	8	31	4
90'	56,861	15	29	35	8	8	15	57	6
PLUG	40,213	10	21	25	5	5	10	41	5

REACTION BEARING AREAS ARE IN SQUARE FEET MEASURED IN A VERTICAL PLANE IN THE TRENCH SIDE AT AN ANGLE OF 90 TO THE THRUST VECTOR.
USE 6" - 90 DEGREE BEND VALUE FOR HYDRANTS FOR ADDITIONAL SAFETY FACTOR.

DETAIL 38 | REVISION DATE JULY 1, 2015

CONCRETE THRUST BLOCKING QUANTITY TABLE, 6" - 16" PIPE

CHATHAM COUNTY PUBLIC UTILITIES & WATER DIVISION
P.O. BOX 910 PITTSBORO, NC 27312
964 EAST STREET, SUITE 205 PITTSBORO, NC 27312
(919) 852-8270 (BUS) (919) 852-8282 (FAX)
CHATHAM COUNTY

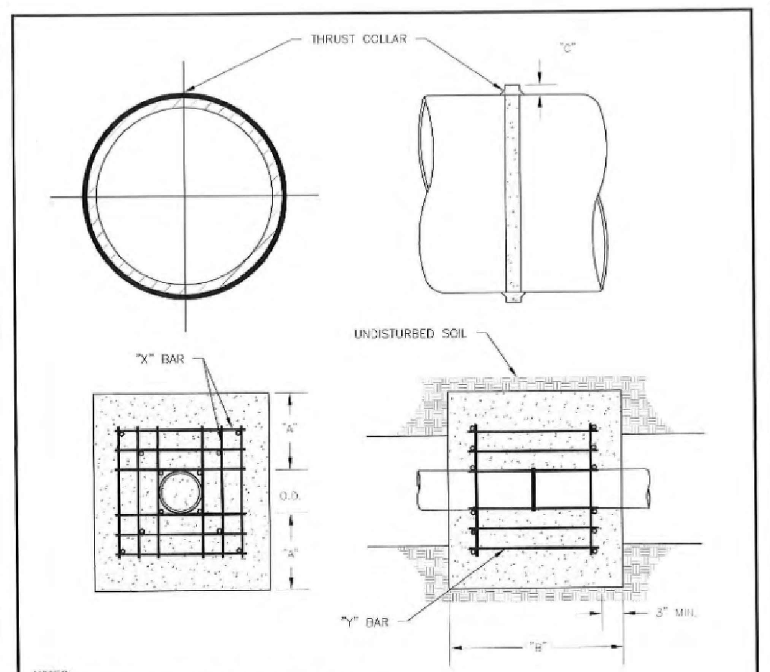

NOTES:
1. CONCRETE SHALL BE 3000 PSI AND TRANSIT MIXED.
2. REINFORCING BARS SHALL BE DEFORMED AND TIED TOGETHER.
3. THRUST COLLAR MUST BE FACTORY WELDED ON BOTH SIDES ALONG BOTH EDGES OF COLLAR AROUND CIRCUMFERENCE.

REINFORCING REQUIREMENTS

I.D. PIPE	REBAR SIZE	"X" BAR LENGTH	"X" BAR WEIGHT	"Y" BAR LENGTH	"Y" BAR WEIGHT	NO. REQUIRED
6" - 36"	#5	2'-2"+ O.D. PIPE	1.043 LBS/FT	1'-1"	1.1 LBS. EACH	X-24, Y-12
48" & GREATER	#6	3'-0"+ O.D. PIPE	1.502 LBS/FT	1'-3"	1.9 LBS. EACH	X-24, Y-12

THRUST COLLAR AND THRUST SCHEDULE

I.D. PIPE	"A"	"B"	"C-6"-16"	20"-24"	30"-36"	48"
6" - 36"	1'-4"	1'-7"	2"	3"	4"	
48" & GREATER	1'-8"	1'-9"				6"

DETAIL 40 | REVISION DATE JULY 1, 2015

CONCRETE THRUST BLOCKING FOR WATER MAINS

CHATHAM COUNTY PUBLIC UTILITIES & WATER DIVISION
P.O. BOX 910 PITTSBORO, NC 27312
964 EAST STREET, SUITE 205 PITTSBORO, NC 27312
(919) 852-8270 (BUS) (919) 852-8282 (FAX)
CHATHAM COUNTY

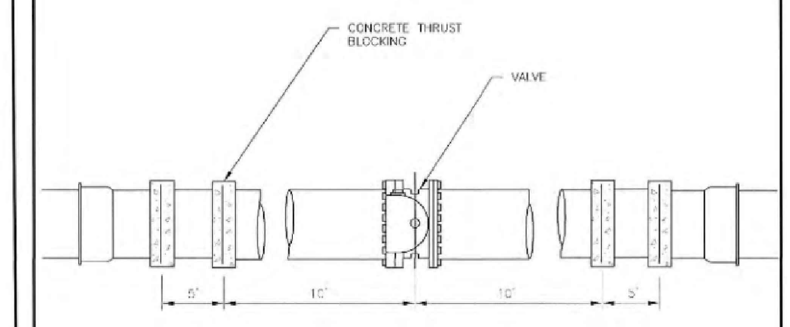

NOTE:
1. 16" OR SMALLER MAIN – 1 THRUST BLOCK REQUIRED
2. GREATER THAN 16" – 2 THRUST BLOCKS REQUIRED

DETAIL 41 | REVISION DATE JULY 1, 2015

CONCRETE THRUST BLOCKING FOR VALVES AND DEAD ENDS

CHATHAM COUNTY PUBLIC UTILITIES & WATER DIVISION
P.O. BOX 910 PITTSBORO, NC 27312
964 EAST STREET, SUITE 205 PITTSBORO, NC 27312
(919) 852-8270 (BUS) (919) 852-8282 (FAX)
CHATHAM COUNTY

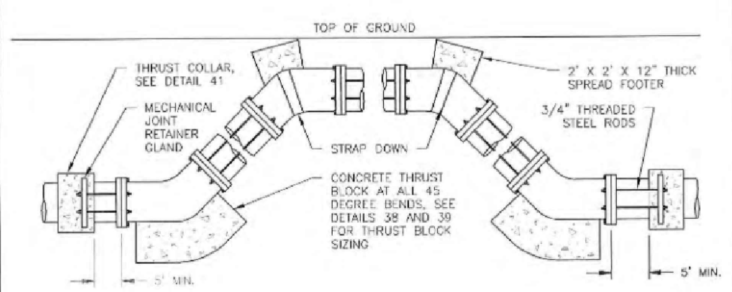

ROD REQUIREMENTS

SIZE OF 45 DEGREE BEND	STATIC THRUST IN POUNDS	NO. OF RODS REQUIRED
6"	4,328	2
8"	7,694	4
12"	17,312	4
16"	30,779	8
24"	69,252	8

NOTES:
1. STEEL RODS AND BOLTS SHALL BE 3/4" HOT DIPPED GALVANIZED.
2. CONCRETE SHALL NOT CONTACT BOLTS OR ENDS OF MECHANICAL JOINT BENDS.
3. RESTRAINED MECHANICAL GLANDS TO BE USED AT ALL FITTINGS.
4. MUST USE DUCTILE IRON EYE BOLTS WHERE NECESSARY.
5. ADD MECHANICAL JOINT RETAINER GLANDS THROUGHOUT ASSEMBLY.
6. 3' MINIMUM COVER MUST BE MAINTAINED ON ALL WATER MAINS

DETAIL 43 | REVISION DATE JULY 1, 2015

VERTICAL BEND ASSEMBLY

CHATHAM COUNTY PUBLIC UTILITIES & WATER DIVISION
P.O. BOX 910 PITTSBORO, NC 27312
964 EAST STREET, SUITE 205 PITTSBORO, NC 27312
(919) 852-8270 (BUS) (919) 852-8282 (FAX)
CHATHAM COUNTY

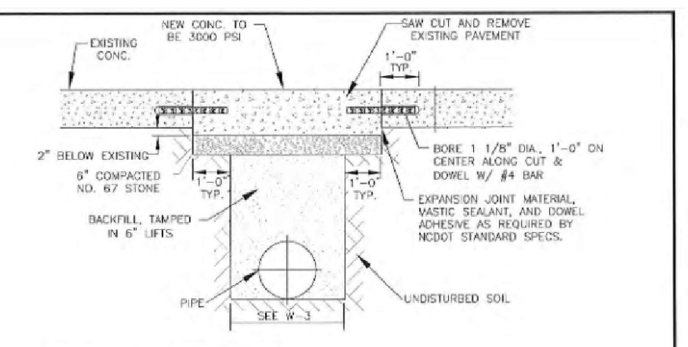

NOTES FOR ASPHALT AND CONCRETE:
1. THE PAVEMENT CUT SHALL BE DEFINED BY A STRAIGHT EDGE AND CUT WITH AN APPROPRIATE SAW CUT MACHINE.
2. SUBGRADE MATERIAL SHALL BE COMPACTED TO A DENSITY OF 95% IN ACCORDANCE WITH AASHTO T-99 AS MODIFIED BY NCDOT.
3. THE FINAL 8" (CONCRETE) OR 12" (ASPHALT) OF FILL SHALL CONSIST OF ABC MATERIAL COMPACTED TO A DENSITY OF 100% IN ACCORDANCE WITH AASHTO T-80 AS MODIFIED BY NCDOT.

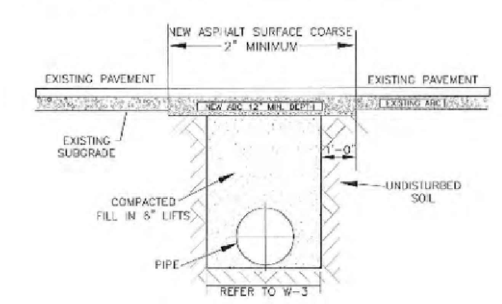

NOTES FOR ASPHALT ONLY:
1. THE ENTIRE THICKNESS/VERTICAL EDGE OF CUT SHALL BE TACKED.
2. THE SAME DEPTH OF PAVEMENT MATERIAL WHICH EXISTS SHALL BE REINSTALLED OR A MINIMUM 3" THICK.
3. THE ASPHALT SHALL BE INSTALLED AND COMPACTED THOROUGHLY WITH A SMOOTH DRUM ROLLER TO ACHIEVE A SMOOTH LEVEL PATCH.
4. NO HAND PATCHING ALLOWED.
5. PAVEMENT CUTS WITHIN NCDOT ROW SHALL CONFORM TO THE APPROVED ON SITE ENCROACHMENT PERMIT.

DETAIL 44 | REVISION DATE JULY 1, 2015

CONCRETE AND ASPHALT OPEN CUT AND PATCH

CHATHAM COUNTY PUBLIC UTILITIES & WATER DIVISION
P.O. BOX 910 PITTSBORO, NC 27312
964 EAST STREET, SUITE 205 PITTSBORO, NC 27312
(919) 852-8270 (BUS) (919) 852-8282 (FAX)
CHATHAM COUNTY

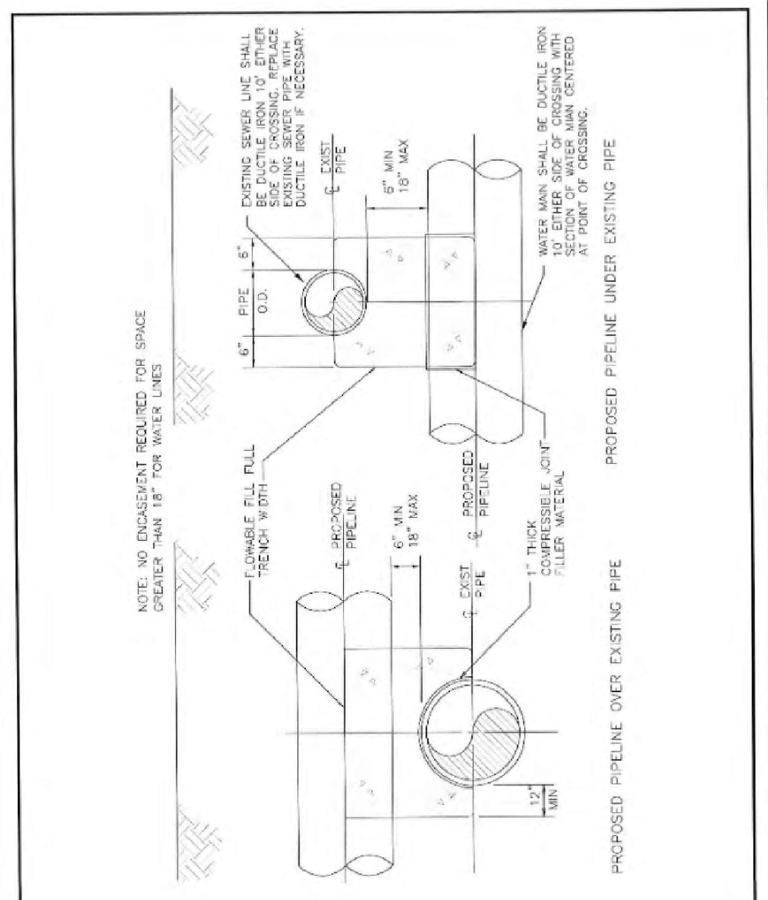

DETAIL 45 | REVISION DATE JULY 1, 2015

WATER AND SEWER CROSSING

CHATHAM COUNTY PUBLIC UTILITIES & WATER DIVISION
P.O. BOX 910 PITTSBORO, NC 27312
964 EAST STREET, SUITE 205 PITTSBORO, NC 27312
(919) 852-8270 (BUS) (919) 852-8282 (FAX)
CHATHAM COUNTY

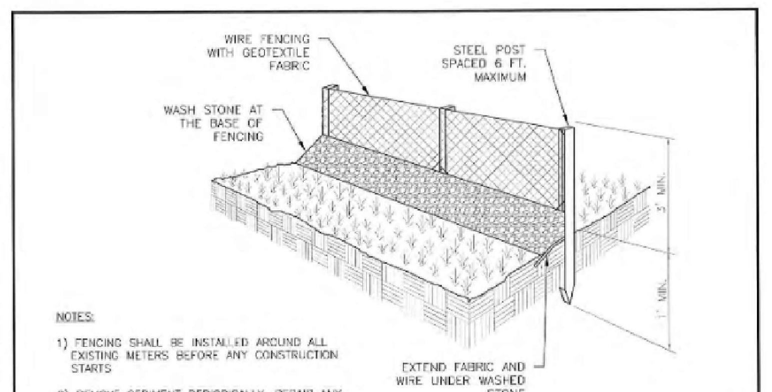

NOTES:
1) FENCING SHALL BE INSTALLED AROUND ALL EXISTING METERS BEFORE ANY CONSTRUCTION STARTS
2) REMOVE SEDIMENT PERIODICALLY, REPAIR ANY UNDERMINING IMMEDIATELY

NOTES:
1) FENCING SHALL BE 5' MINIMUM AROUND METER
2) FAUCET SHALL BE 10' MINIMUM FROM METER BOX
3) FENCING SHALL BE INSPECTED AND APPROVED BEFORE CONSTRUCTION STARTS

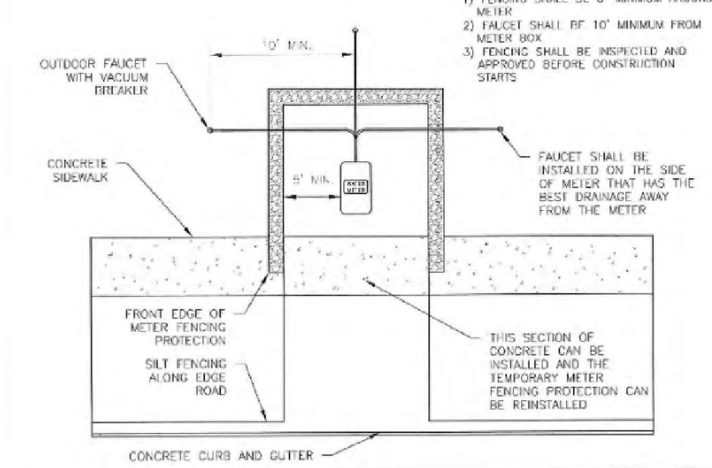

DETAIL 47 | REVISION DATE JULY 1, 2015

TEMPORARY METER FENCING PROTECTION

CHATHAM COUNTY PUBLIC UTILITIES & WATER DIVISION
P.O. BOX 910 PITTSBORO, NC 27312
964 EAST STREET, SUITE 205 PITTSBORO, NC 27312
(919) 852-8270 (BUS) (919) 852-8282 (FAX)
CHATHAM COUNTY

STATE OF NORTH CAROLINA
DEPT. OF TRANSPORTATION
DIVISION OF HIGHWAYS
RALEIGH, N.C.
1-12

ENGLISH STANDARD DRAWING FOR
TEMPORARY STREAM CROSSING

SHEET 1 OF 1
1645.01

THIS DETAIL IS ONLY TO BE USED IF NEEDED FOR SITE ACCESS ALONG SUNSET GROVE DRIVE PRIOR TO CULVERT(S) INSTALLATION

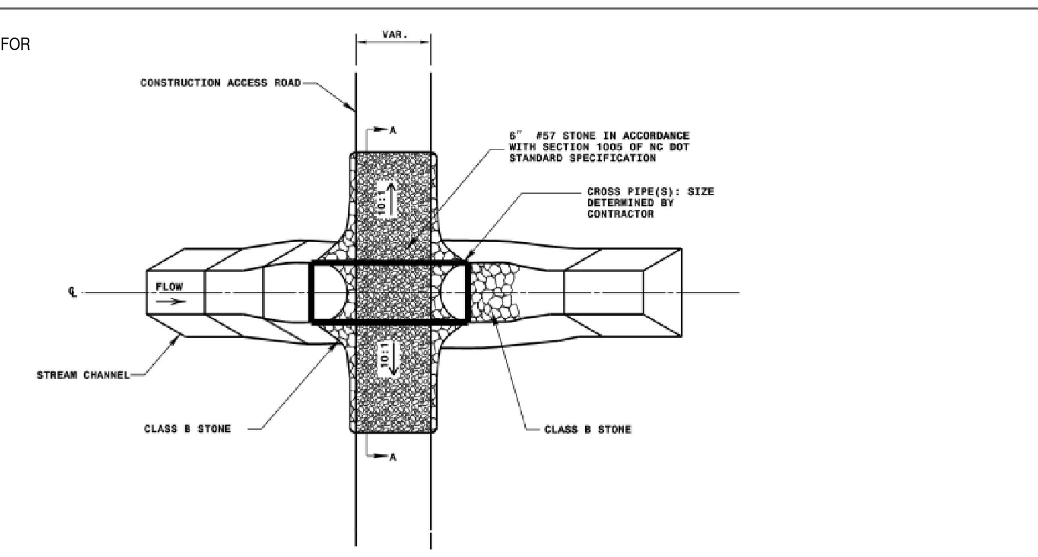

PLAN VIEW

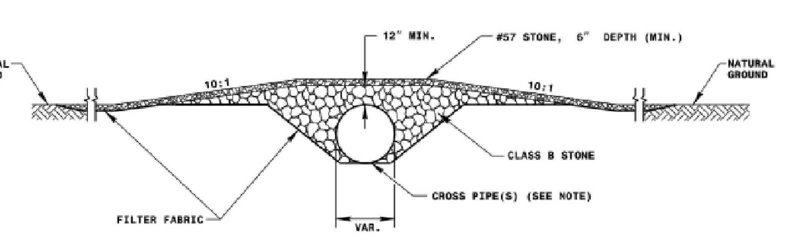

SECTION A-A
NOT TO SCALE

NOTE: PIPE(S) FOR TEMPORARY STREAM CROSSING SHALL BE DESIGNED TO PASS THE PEAK OR BANKFULL FLOW, WHICHEVER IS LESS, FROM A 2-YEAR PEAK STORM, WITHOUT OVER TOPPING.

STATE OF NORTH CAROLINA
DEPT. OF TRANSPORTATION
DIVISION OF HIGHWAYS
RALEIGH, N.C.
1-12

ENGLISH STANDARD DRAWING FOR
TEMPORARY STREAM CROSSING

SHEET 1 OF 1
1645.01

NOTES
1. ALL CONSTRUCTION TO BE IN STRICT ACCORDANCE WITH ALL CHATHAM COUNTY AND NCDOT STANDARDS AND SPECIFICATIONS.

B & F CONSULTING
2805 Tobermory Lane
Raleigh, NC 27606
Phone No. (919) 618-0180
License No. C-2149

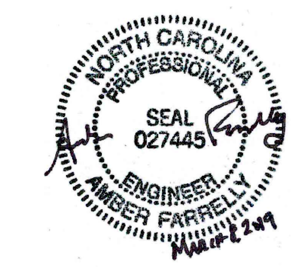

REVISIONS

NO.	DATE	DESCRIPTION

PROJECT INFORMATION

PROJECT MANAGER:	RJB
DRAWN BY:	AJF
APPROVED BY:	RJB
DRAWING NAME:	BASE-SUNSETGROV

PROJECT NAME

SUNSET GROVE SUBDIVISION PHASE 2
CHATHAM COUNTY NORTH CAROLINA

DEVELOPER

CHATHAM CAPITAL LLC
400 MARKET STREET
CHAPEL HILL, NC 27516

SHEET NAME

DETAILS

DRAWING SCALE
AS SHOWN

PLAN SET
CONSTRUCTION DRAWINGS

DATE
3-8-2019

SHEET NUMBER
D-4

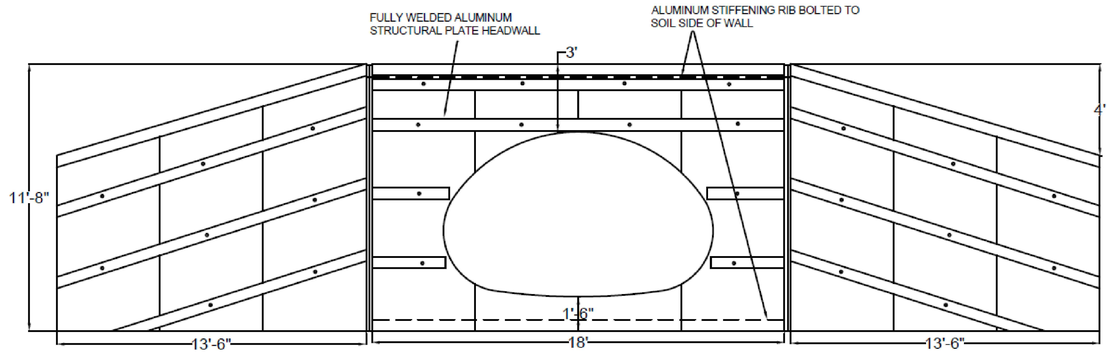

END VIEW- INLET & OUTLET HEADWALL

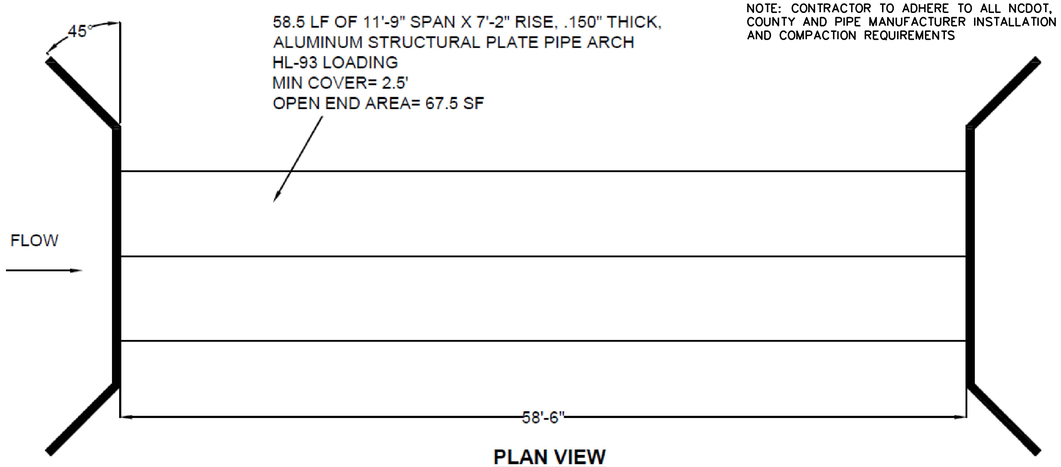

NOTE: CONTRACTOR TO ADHERE TO ALL NCDOT, COUNTY AND PIPE MANUFACTURER INSTALLATION AND COMPACTION REQUIREMENTS

PLAN VIEW

PIPE ARCH CULVERT, N.T.S.

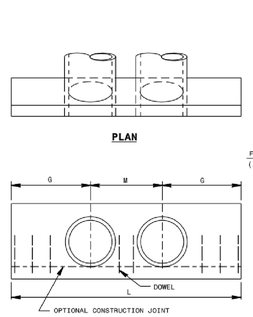

GENERAL NOTES:

CHAMFER ALL CORNERS 1" OR HAVE A RADIUS OF 1".

PLACE 2 #6 "Y" BARS IN TOP OF ALL ENDWALL FOR PIPE CULVERTS 48" AND OVER WITH A MINIMUM OF 3" COVER AND A LENGTH OF 6' LESS THAN ENDWALL LENGTH.

CONSTRUCT BOTTOM SLAB WITH FORMS.

DO NOT INTERPRET WALL THICKNESS (T) SHOWN FOR THE THICKNESS ACCEPTABLE, BUT IS USED IN COMPUTING ENDWALL QUANTITIES.

WHEN THE CONTRACTOR ELECTS TO USE A CONSTRUCTION JOINT AT THE BOTTOM OF THE PIPE, PLACE BAR "X" DOWELS IN THE BASE AS SHOWN ON PLANS. SPACE BARS APPROXIMATELY ON 12" CENTERS UNLESS OTHERWISE DIRECTED BY THE ENGINEER.

WHEN THE CONTRACTOR ELECTS TO USE A CONSTRUCTION JOINT AT THE BOTTOM OF THE PIPE AND POUR THE BASE SEPARATELY LEAVE THE POUR ROUGH.

USE CLASS "B" CONCRETE.

DOWELS IN ENDWALL WITH REINFORCED CONCRETE PIPE

LOC.	PIPE DIA.	SINGLE PIPE 15"	18"	24"	30"	36"	42"	48"	DOUBLE PIPE 15"	18"	24"	30"	36"	42"	48"
	BARS	"X"	"X"	"X"	"X"	"X"	"X" Y*	"X" Y*	"X"	"X"	"X"	"X"	"X"	"X" Y*	"X" Y*
G	QTY.	2	2	3	3	4	4	5	2	2	3	3	4	4	5
M	QTY.	-	-	-	-	-	2 -	2	1	1	2	2	2	2 2	3 2
G	QTY.	2	2	3	3	4	4	5	2	2	3	3	4	4	5
TOTAL LBS.		9	9	14	14	19	55	65	12	12	19	19	23	77	92

DIMENSIONS AND CONCRETE QUANTITIES

USING CONCRETE PIPE	COMMON DIMENSIONS						SINGLE PIPE	DOUBLE PIPE		
D	H	B	G	T	S	L	YD³	M	L	YD³
15"	3'-3"	1'-8"	2'-9"	2¼"	9½"	5'-6"	0.7	2'-2"	7'-8"	1.0
18"	3'-7"	1'-10"	3'-2"	2½"	10"	6'-4"	1.0	2'-7"	8'-11"	1.3
24"	4'-2"	2'-1"	4'-0"	3"	10"	8'-0"	1.5	3'-5"	11'-5"	2.0
30"	5'-0"	2'-6"	4'-7"	4¼"	11½"	9'-2"	2.3	4'-3"	13'-5"	3.1
36"	5'-8"	2'-8"	5'-6"	4¾"	11½"	11'-0"	3.4	5'-0"	16'-0"	4.5
42"	6'-2"	3'-1"	6'-4"	5¼"	11½"	12'-8"	4.5	5'-10"	18'-6"	6.0
48"	6'-9"	3'-5"	7'-2"	5¾"	11½"	14'-4"	6.0	6'-8"	21'-0"	8.0

*SEE SHEET 3

STATE OF NORTH CAROLINA DEPT. OF TRANSPORTATION DIVISION OF HIGHWAYS RALEIGH, N.C.

1-18

ROADWAY STANDARD DRAWING FOR **CONCRETE ENDWALL FOR SINGLE AND DOUBLE PIPE CULVERTS** 15" THRU 48" PIPE - 90° SKEW

SHEET 1 OF 3

838.01

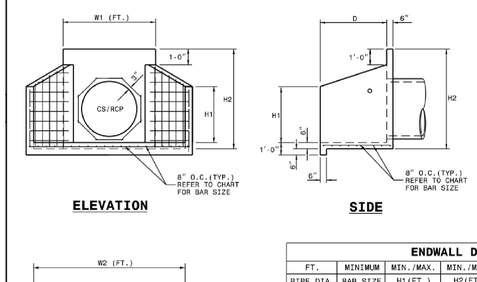

NOTES:

* THIS PRECAST ENDWALL MAY BE USED FOR THE FOLLOWING STANDARDS: 838.01, 838.11, 838.21, 838.27, 838.33, 838.39, 838.51, 838.57, 838.63 AND 838.69.
* INSTALL PRECAST ENDWALLS WITH WINGS AND PAY FOR IN ACCORDANCE WITH SPECIFICATION SECTION 838.
* USE 4000 PSI CONCRETE.
* PROVIDE ALL REINFORCING STEEL WHICH MEETS ASTM A615 FOR GRADE 60 AND WELDED WIRE FABRIC CONFORMING TO ASTM A185 WITH 2" MIN. CLEARANCE.
* PLACE LIFT HOLES OR PINS IN ACCORDANCE WITH OSHA STANDARD 1926.704.
* PIPE TO BE GROUTED INTO HEADWALL AT JOB SITE BY CONTRACTOR
* ALL ELEMENTS PRECAST TO MEET ASTM C913.
* WELDED WIRE FABRIC MAY BE SUBSTITUTED FOR REBAR AS LONG AS THE SAME AREA OF STEEL IS PROVIDED.
* CHAMFER ALL CORNERS 1" OR HAVE A RADIUS OF 1".

NOTE: THE MINIMUM BAR SIZE SHALL BE #5 BARS AT 8" CTS.THE CONTRACTOR WILL HAVE THE OPTION TO INCREASE THIS BAR SIZE AS NEEDED.

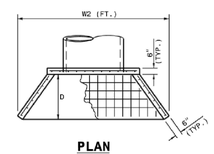

NOTES:
1. CONTRACTOR TO ADHERE TO ALL NCDOT, COUNTY AND PIPE MANUFACTURER INSTALLATION AND COMPACTION REQUIREMENTS
2. DOWNSTREAM ENDWALL FOR 36" CULVERT TO BE AT MAXIMUM H2 WALL HEIGHT PER NCDOT

ENDWALL DIMENSIONS

FT.	MINIMUM	MIN./MAX.	MIN./MAX.	MIN./MAX.	MIN./MAX.	MIN./MAX.
PIPE DIA.	BAR SIZE	H1(FT.)	H2(FT.)	D (FT.)	W1	W2
1.0	#5 @ 8"	1.25/2.00	2.00/3.75	1.25/1.75	3.00/3.75	5.50/6.00
1.25	#5 @ 8"	1.25/2.00	3.00/3.75	1.25/2.00	3.50/3.75	6.50/6.75
1.50	#5 @ 8"	1.25/2.00	3.00/4.25	1.50/2.50	3.50/3.75	6.50/6.75
2.0	#5 @ 8"	1.50/2.50	4.00/4.75	1.75/2.50	4.00/4.25	7.50/8.25
2.5	#5 @ 8"	2.50/3.50	4.00/6.00	2.00/3.00	4.50/5.50	10.00/11.50
3.0	#5 @ 8"	3.00/3.50	5.00/6.00	2.75/3.50	5.25/5.75	11.50/11.75
3.5	#5 @ 8"	3.25/4.50	6.00/6.75	3.25/3.50	6.00/6.75	12.00/13.25
4.0	#5 @ 8"	3.50/4.50	6.50/7.00	3.25/3.50	6.50/6.75	13.00/13.25
4.5	#5 @ 8"	4.00/5.00	6.50/8.50	3.25/4.00	7.00/9.25	13.50/15.75
5.0	#5 @ 8"	4.50/5.00	7.00/8.50	3.25/4.00	7.25/9.25	13.75/15.75
5.5	#5 @ 8"	4.50/5.00	7.50/8.50	3.25/4.00	7.25/9.25	14.00/15.75
6.0	#5 @ 8"	4.50/5.00	7.50/8.50	3.25/4.00	7.75/9.25	14.75/16.75

STATE OF NORTH CAROLINA DEPT. OF TRANSPORTATION DIVISION OF HIGHWAYS RALEIGH, N.C.

1-18

ROADWAY STANDARD DRAWING FOR **PRECAST CONCRETE ENDWALL** FOR SINGLE 12" THRU 72" PIPE - 90° SKEW

SHEET 1 OF 1

838.80

TYPE I OBJECT MARKERS

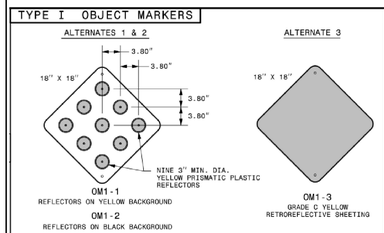

NOTES:
1- MATERIAL- .125" ALUMINUM PANEL.

TYPE 2 OBJECT MARKERS

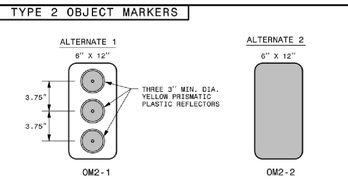

NOTES:
1- MATERIAL- .125" ALUMINUM PANEL.

TYPE 3 OBJECT MARKERS

NOTES:
1- GRADE C YELLOW RETROFLECTIVE SHEETING WITH ALTERNATING BLACK AND YELLOW STRIPES.
2- STRIPES SLOPE DOWNWARD AT 45 DEGREES TOWARD THE SIDE OF THE OBSTRUCTION WHICH TRAFFIC IS TO PASS.
3- MATERIAL-.125" ALUMINUM PANEL.

TYPE 4 OBJECT MARKERS(END OF ROAD)

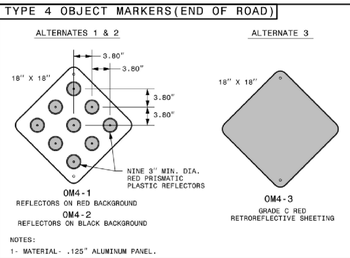

NOTES:
1- MATERIAL- .125" ALUMINUM PANEL.

STATE OF NORTH CAROLINA DEPT. OF TRANSPORTATION DIVISION OF HIGHWAYS RALEIGH, N.C.

1-18

ROADWAY STANDARD DRAWING FOR **OBJECT MARKERS** TYPES

SHEET 1 OF 1

1264.01

TYPE 1 OR TYPE 3 MARKERS FOR OBSTRUCTIONS WITHIN THE ROADWAY

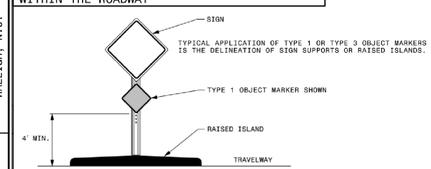

TYPE 4 MARKERS FOR END OF ROADWAY

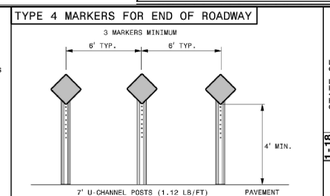

TYPE 2 OR TYPE 3 MARKERS FOR OBSTRUCTIONS ADJACENT TO THE ROADWAY

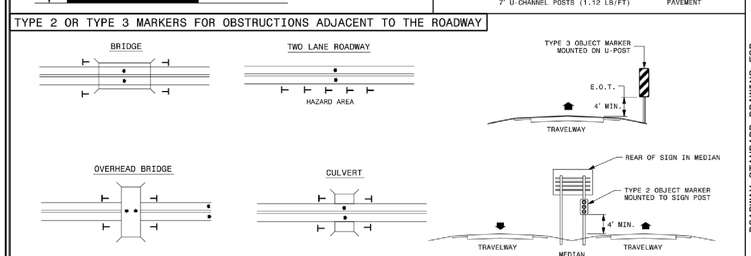

TYPICAL APPLICATIONS OF TYPE 2 OR TYPE 3 OBJECT MARKERS INCLUDES DELINEATION OF BRIDGE PIERS, ABUTMENTS, HANDRAILS, CULVERT HEADWALLS, NARROW SHOULDERS, DROP-OFFS, OR OTHER UNDESIRABLE CONDITIONS WHEN GUARDRAIL OR OTHER ROADSIDE PROTECTION IS NOT IN PLACE.

LEGEND
- OBJECT MARKER
- DIRECTION OF TRAFFIC FLOW

STATE OF NORTH CAROLINA DEPT. OF TRANSPORTATION DIVISION OF HIGHWAYS RALEIGH, N.C.

1-18

ROADWAY STANDARD DRAWING FOR **OBJECT MARKERS** INSTALLATION

SHEET 1 OF 1

1264.02

NOTES

1. ALL CONSTRUCTION TO BE IN STRICT ACCORDANCE WITH ALL CHATHAM COUNTY AND NCDOT STANDARDS AND SPECIFICATIONS.

B&F CONSULTING
2805 Tobermory Lane
Raleigh, NC 27606
Phone No. (919) 618-0180
License No. C-2149

NORTH CAROLINA PROFESSIONAL SEAL 027445 ENGINEER AMBER FARRELL

REVISIONS

NO.	DATE	DESCRIPTION

PROJECT INFORMATION

PROJECT MANAGER:	RJB
DRAWN BY:	AJF
APPROVED BY:	RJB
DRAWING NAME:	BASE-SUNSETGROV

PROJECT NAME

SUNSET GROVE SUBDIVISION PHASE 2

CHATHAM COUNTY NORTH CAROLINA

DEVELOPER

CHATHAM CAPITAL LLC

400 MARKET STREET
CHAPEL HILL, NC 27516

SHEET NAME

DETAILS

DRAWING SCALE

AS SHOWN

PLAN SET

CONSTRUCTION DRAWINGS

DATE

3-8-2019

SHEET NUMBER

D-5